REPAIR PARTS FOR MODEL 45-01762 7 CU. FT. FARM/YARD CART

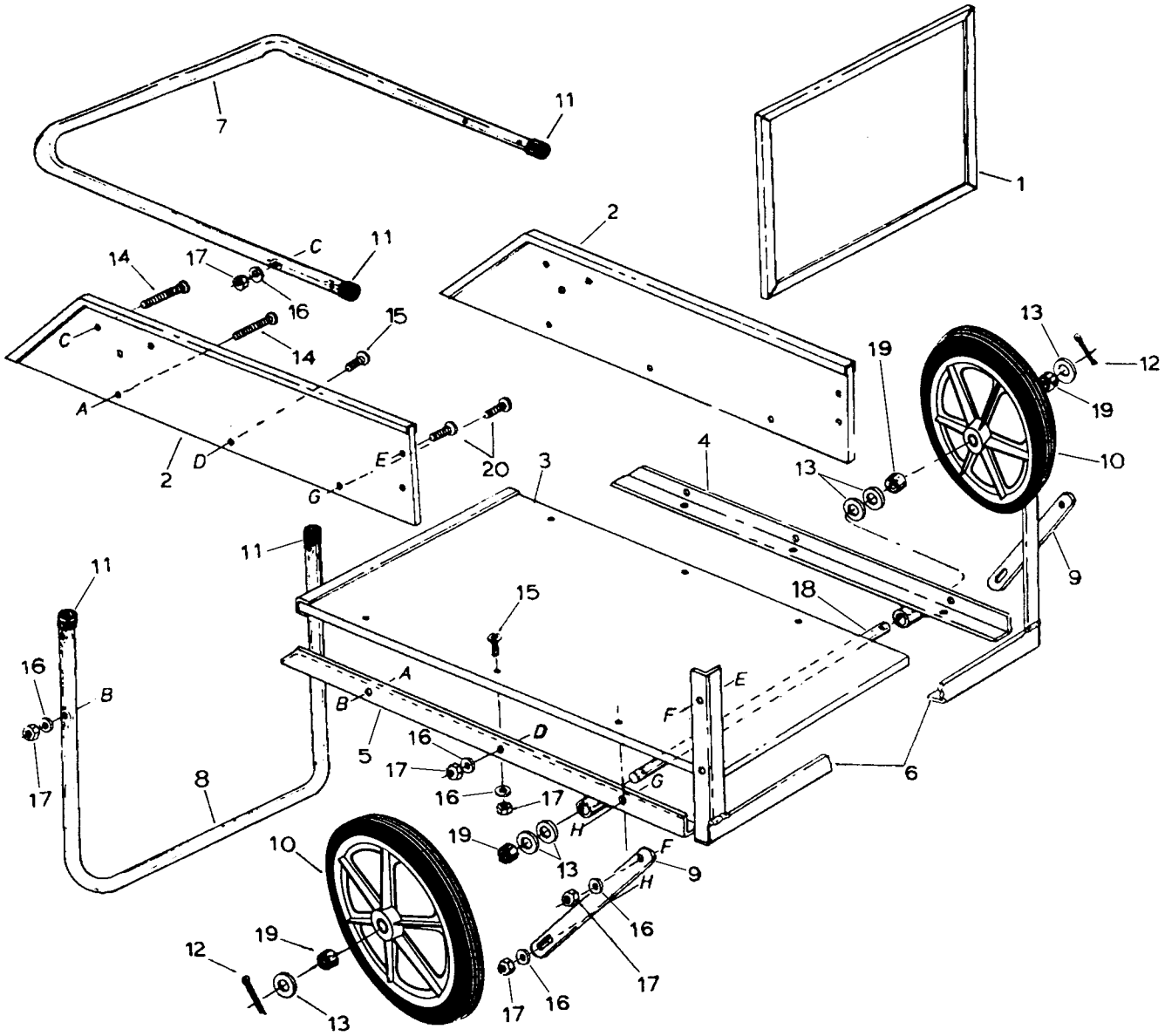

REF. NO.	PART NO.	QTY.	DESCRIPTION	REF. NO.	PART NO.	QTY.	DESCRIPTION
1	47585	1	Front Panel	12	43010	2	Cotter Pin, 1/8" x 1-1/4" Lg.*
2	47586	2	Side Panel	13	43949	4	Flat Washer 25/32" I.D. x 1-1/2" O.D. x 3/32" Thick
3	47587	1	Bottom Panel				
4	62527	1	Side Angle Assembly, L.H.	14	47584	8	Truss Head Screws 1/4-20 x 2" Lg.*
5	62528	1	Side Angle Assembly, R.H.	15	44259	13	Truss Head Screws 1/4-20 x 1" Lg.*
6	62529	1	Front Angle	16	43088	25	Flat Washer, 1/4" I.D.*
7	44018	1	Handle Tube	17	43178	25	Hex Nut, 1/4-20 Thread *
8	44019	1	Leg Tube	18	23991	1	Axle
9	23606	2	Support Strap	19	44016	4	Bearing, Ball 3/4" I.D.
10	44975	2	Wheel Assembly Complete w/Bearings (20")	20	44020	4	Truss Head Screws 1/4-20 x 1-1/4" Lg.*
					47591	1	Owner's Manual
11	44021	4	Tube Caps				

*Purchase Common Hardware Locally.